ISODEC CLASSIC

THERMAL INSULATED DUCTING

The **ISODEC CLASSIC** series consists of an aluminium laminate inner duct, thermally insulated with a glass wool layer and provided with a polyester/metalized polyester laminated outer jacket. The thermal insulation is suitable for preventing condensation and minimizing heat loss and loss of cold.

APPLICATION

- Steam return lines
- Insulation in ventilation and air supply systems
- Air conditioning systems
- Thermic insulation in order to prevent heat loss or loss of cold
- Preventing of condensation in ventilation systems

SPECIFICATIONS

Article code:	CLDI{Ø}
Temperature range:	-30 °C to 140 °C
Operating pressure:	up to +2500 Pa
Operating air velocity:	max. 30 m/s
Min. bending radius:	1 x Ø + 25mm
Standard diameter range:	82 – 406 mm
Standard length:	10 mtr

CONSTRUCTION

Inner duct:	Alu/poly laminate
Glass wool blanket:	25mm, 16kg/m³
Outer jacket:	Poly/metalized poly laminate
R-value glass wool:	0.65 m² K/W (ASTM C177-76)
Appearance:	Aluminium

CLASSIFICATIONS

EU (EN 13501-1):	B-s1,d0
FR (NF):	M1

PRESSURE LOSS (STRAIGHT DUCT)

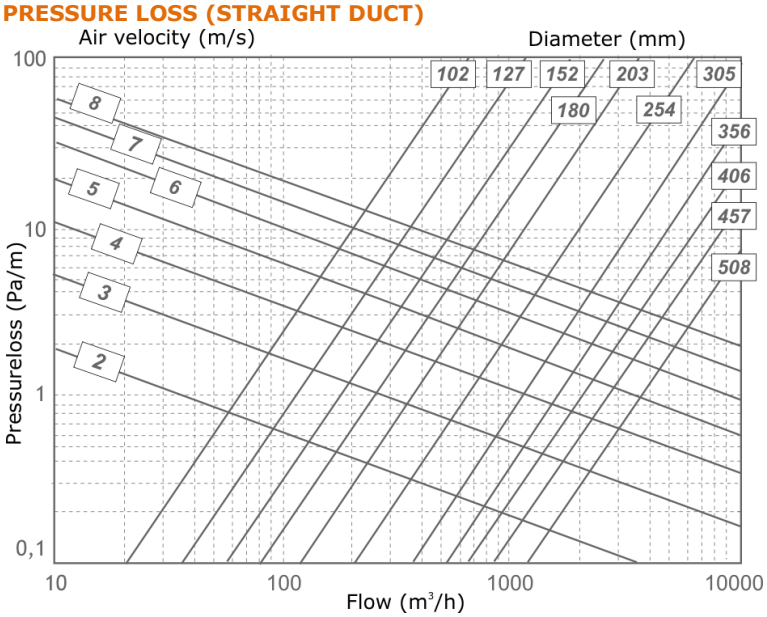

Regulation or protocol	Conclusion	Version of regulation or protocol
French VOC Regulation	ÉMISSIONS DANS L'AIR INTÉRIEUR* A+ (A+ A B C)	Regulation of March and May 2011 (DEVL1101903D and DEVL1104875A)

The **ISODEC CLASSIC** fulfills all the requirements and are classified as specified within EN 13180:
Ventilation for buildings – Ductwork - Dimensions and mechanical requirements for flexible ducts.

The **ISODEC CLASSIC** is also available, on request, with a 50 mm glass wool layer, the article number is: CLDI50{Ø}
R-value glass wool: 1.3 (50 mm) m² K/W (ASTM C177-76).

Reach/RoHs Compliant
Directive 2011/65/EU RoHS
Phthalates according to 1907/2006/EC REACH
Test result: Pass - The test items meets the requirements of the test specification

LIABILITY:
The information contained in this brochure was current on the publication date. DEC INTERNATIONAL reserves the right to make changes in details at any time without prior notice. In order to avoid misunderstandings, any interested party is advised to contact DEC INTERNATIONAL checking for any changes in materials and/or information after this brochure was published.

PLEASE NOTICE:
The consultant is responsible for the actual installation and mounting of the product. The mentioned values with respect to temperatures are not appropriate to be used to determine the physical properties. These properties are also dependent on humidity and the temperature of the air inside and outside of the H.V.A.C. system.

TRADEMARKS:
ISODEC, the DEC logo and DEC International are trademarks, or registered trademarks of Dutch Environment Corporation BV in the Netherlands and/or other countries.

RESTRICTIONS:
The ISODEC ducts are not suitable for discharging combustion products from open fireplaces and oil-fired boilers. Neither are the ISODEC ducts suitable for transporting air with a high concentration of acid and base.